TYPICAL OUTLOOK FOR 9400-S PARALLEL SLIDING SHOWER SCREEN

OPENED

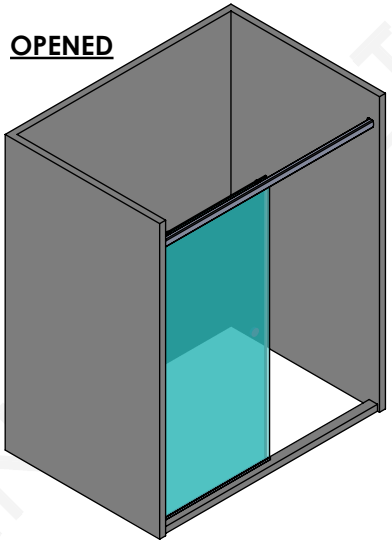

CLOSED

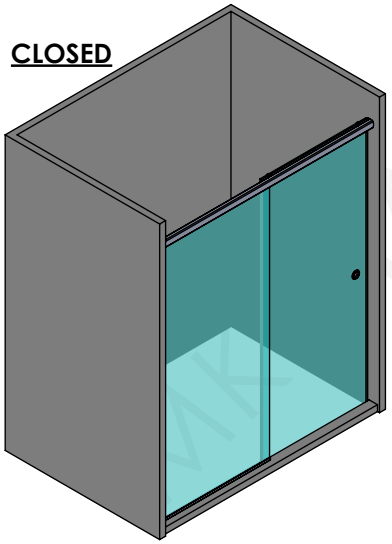

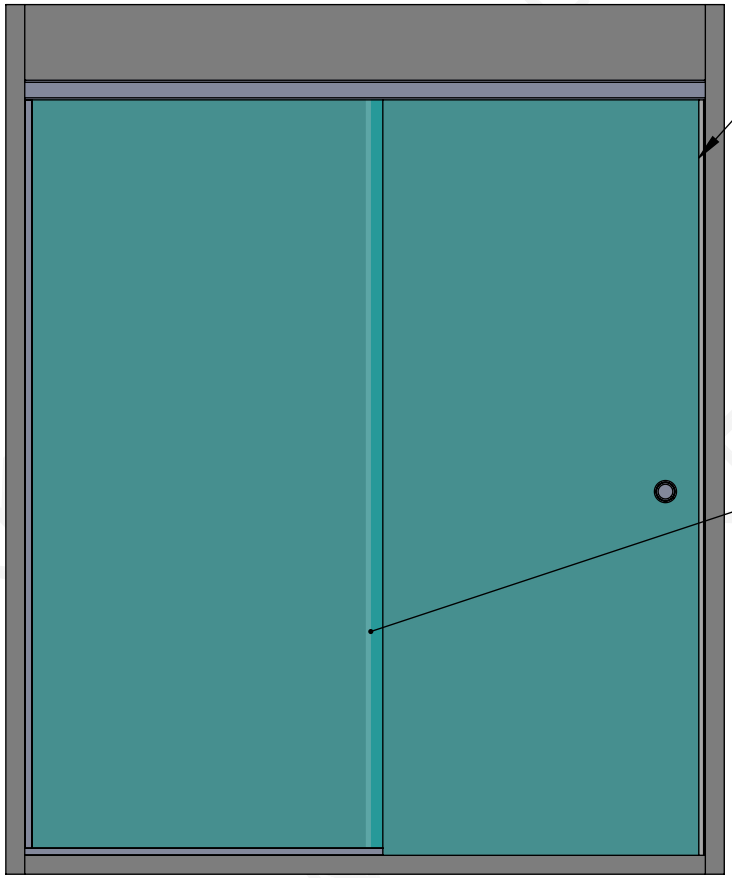

ROUND TIP SEAL
(USED BETWEEN DOOR AND WALL)

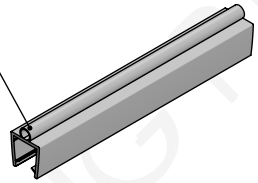

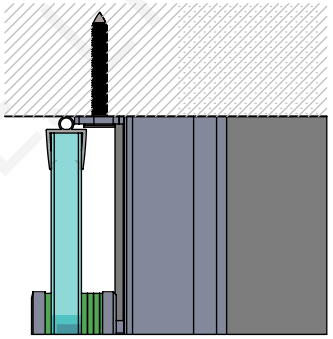

TOP VIEW

12mm 'F' SEAL
(USED ON OVERLAPS)

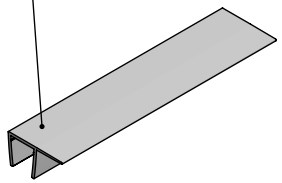

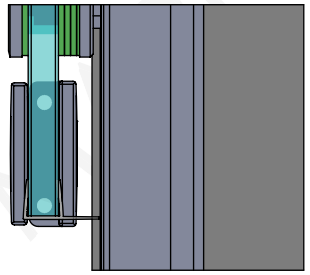

NOTE: ALL DIMENSIONS IN MILLIMETERS (MM) UNLESS STATED.

MWO Hardware
mwohardware.com.sg

MODEL:

SC9400 PARALLEL SLIDING SHOWER SCREEN SYSTEM

DATE: 10-FEB-2026

Disclaimer:

The above drawing is property of MWO Hardware & MK Marketing Pte Ltd and it is solely for referencing glass preparation. It shall not be distributed without consent from our company and all rights of this drawing are reserved. The company is indemnified against any claims arising from the user's interpretation of the technical drawing above.

TRACK LENGTH & GLASS DOOR CALCULATION REFERENCE DIAGRAM

FRONT VIEW

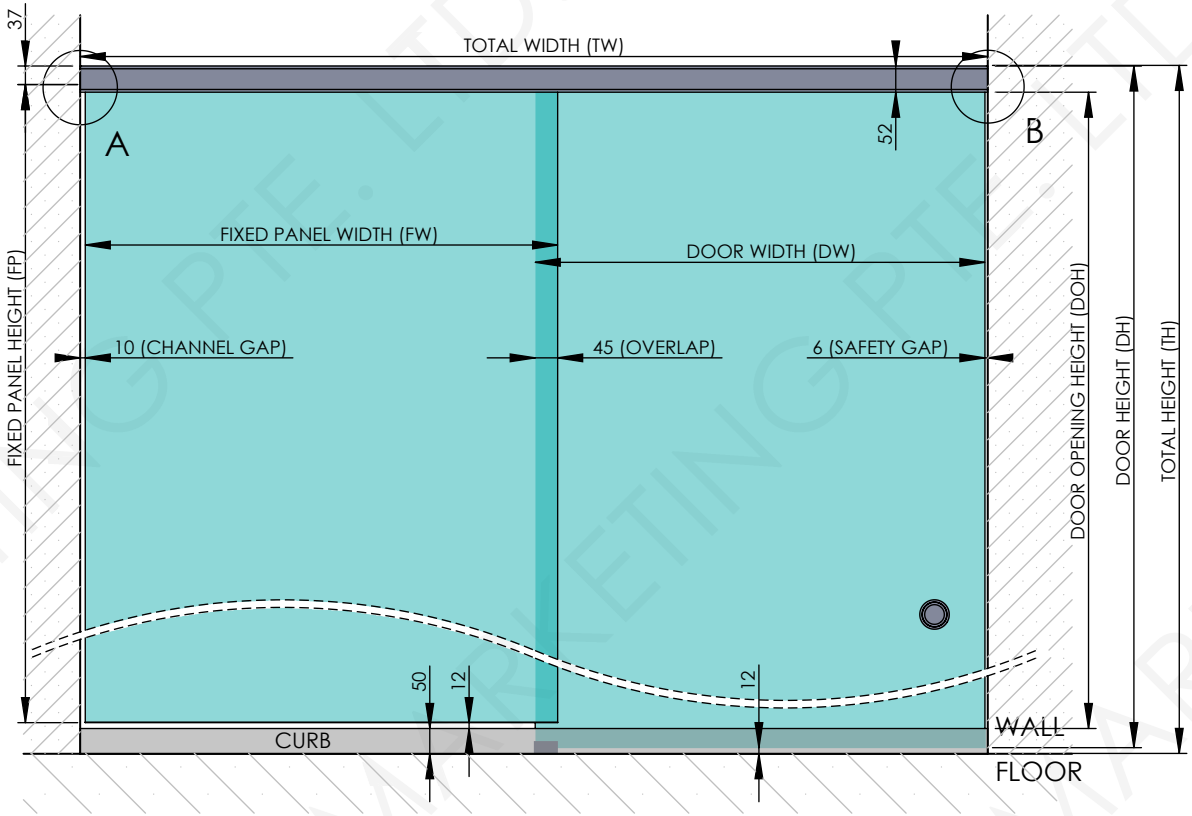

SIDE VIEW OF SYSTEM

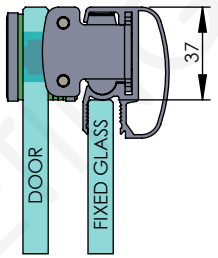

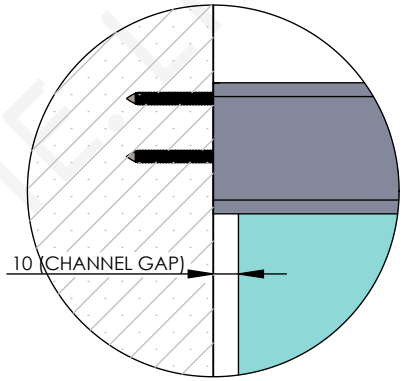

DETAIL A
SCALE 1 : 3

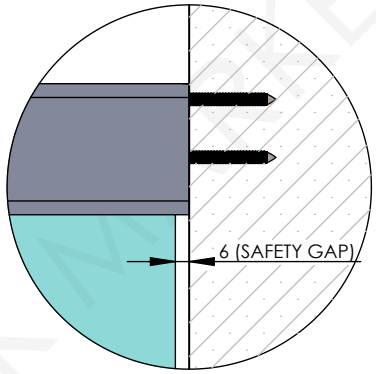

DETAIL B
SCALE 1 : 3

DW = (TW - 6 - 10) / 2
FW = DW + 45
DH = TH - 12
FP = TH - 12 - 50 - 37
DOH = TH - 52 - 55

CURB WIDTH = 70
CURB HEIGHT = 50
MAX DOOR WEIGHT = 40KG

NOTE: ALL DIMENSIONS IN MILLIMETERS (MM) UNLESS STATED.

MWO Hardware
mwohardware.com.sg

MODEL:
SC9400 PARALLEL SLIDING SHOWER SCREEN SYSTEM

DATE: 10-FEB-2026

Disclaimer:
The above drawing is property of MWO Hardware & MK Marketing Pte Ltd and it is solely for referencing glass preparation. It shall not be distributed without consent from our company and all rights of this drawing are reserved. The company is indemnified against any claims arising from the user's interpretation of the technical drawing above.

GLASS PREPARATION FOR CUT-OUT

FRONT VIEW

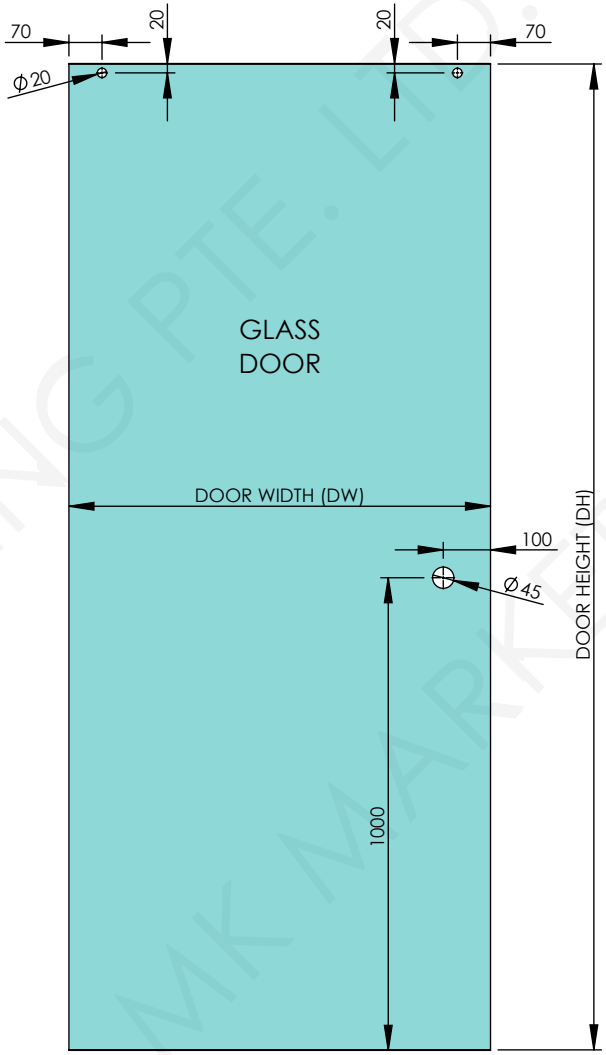

NOTE: ALL DIMENSIONS IN MILLIMETERS (MM) UNLESS STATED.

MWO Hardware
mwohardware.com.sg

MODEL:
SC9400 PARALLEL SLIDING SHOWER SCREEN SYSTEM

DATE: 10-FEB-2026

Disclaimer:
The above drawing is property of MWO Hardware & MK Marketing Pte Ltd and it is solely for referencing glass preparation. It shall not be distributed without consent from our company and all rights of this drawing are reserved. The company is indemnified against any claims arising from the user's interpretation of the technical drawing above.

MK MARKETING PTE. LTD.

SCREW AND STOPPER POSITION REFERENCE DIAGRAM

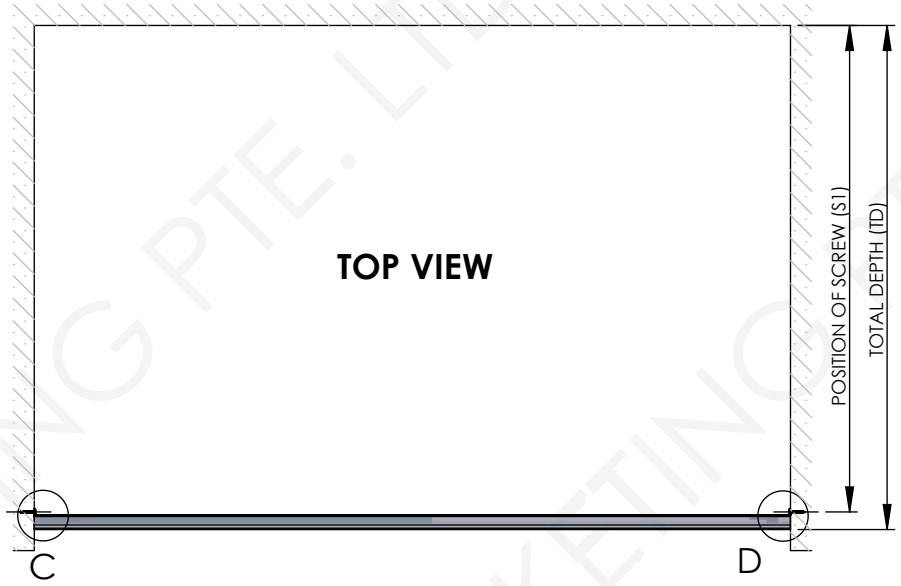

SH1 = TH - 6
SH2 = TH - 6 - 23
S1 = TD - 42

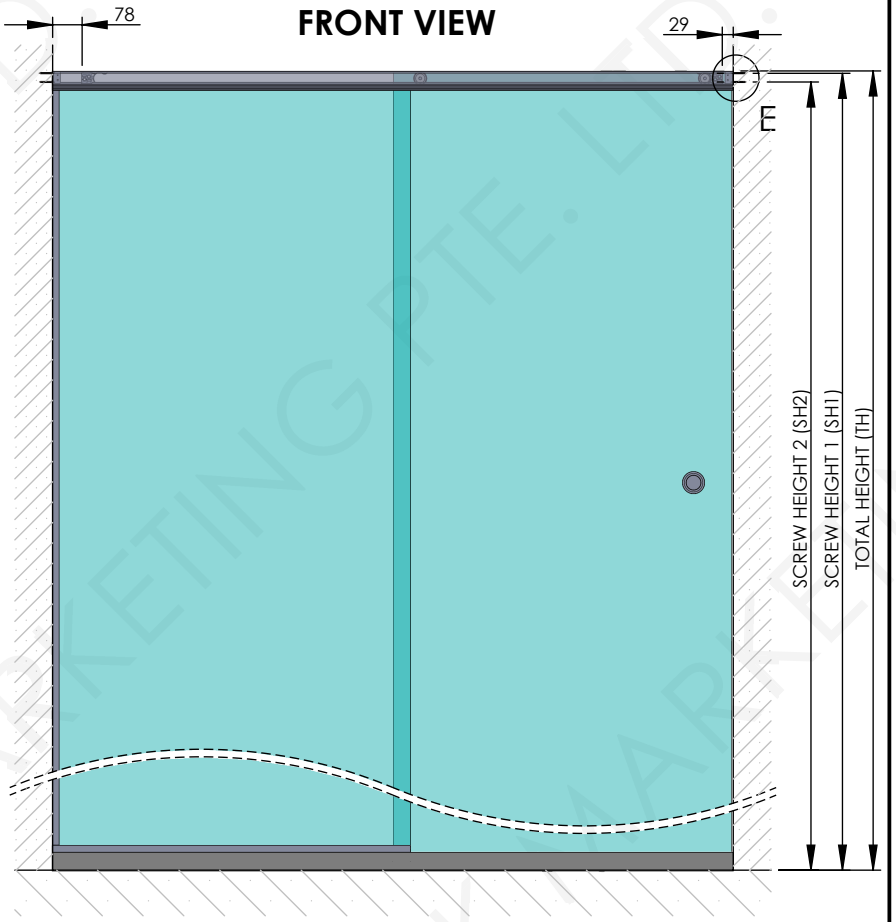

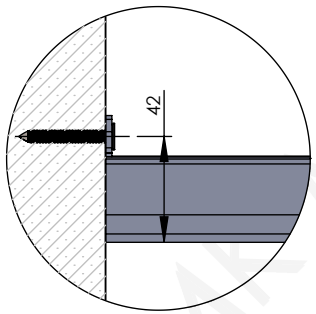

DETAIL C
SCALE 1 : 3

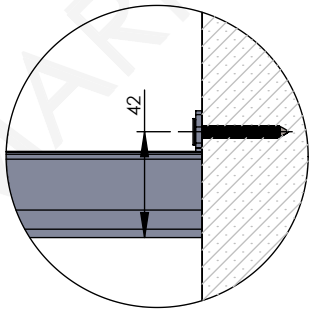

DETAIL D
SCALE 1 : 3

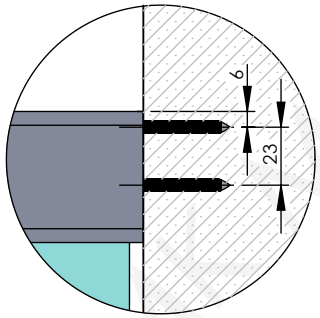

DETAIL E
SCALE 1 : 3

NOTE: ALL DIMENSIONS IN MILLIMETERS (MM) UNLESS STATED.

MWO Hardware
mwohardware.com.sg

MODEL:
SC9400 PARALLEL SLIDING SHOWER SCREEN SYSTEM

DATE: 10-FEB-2026

Disclaimer:
The above drawing is property of MWO Hardware & MK Marketing Pte Ltd and it is solely for referencing glass preparation. It shall not be distributed without consent from our company and all rights of this drawing are reserved. The company is indemnified against any claims arising from the user's interpretation of the technical drawing above.