TYPICAL OUTLOOK FOR 9400-L L SHAPED SLIDING SHOWER SCREEN SYSTEM

OPENED

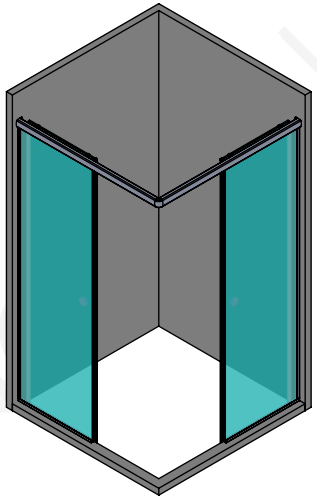

CLOSED

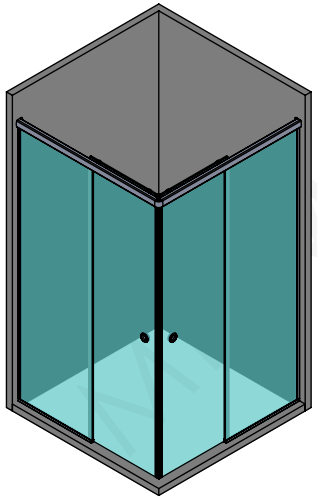

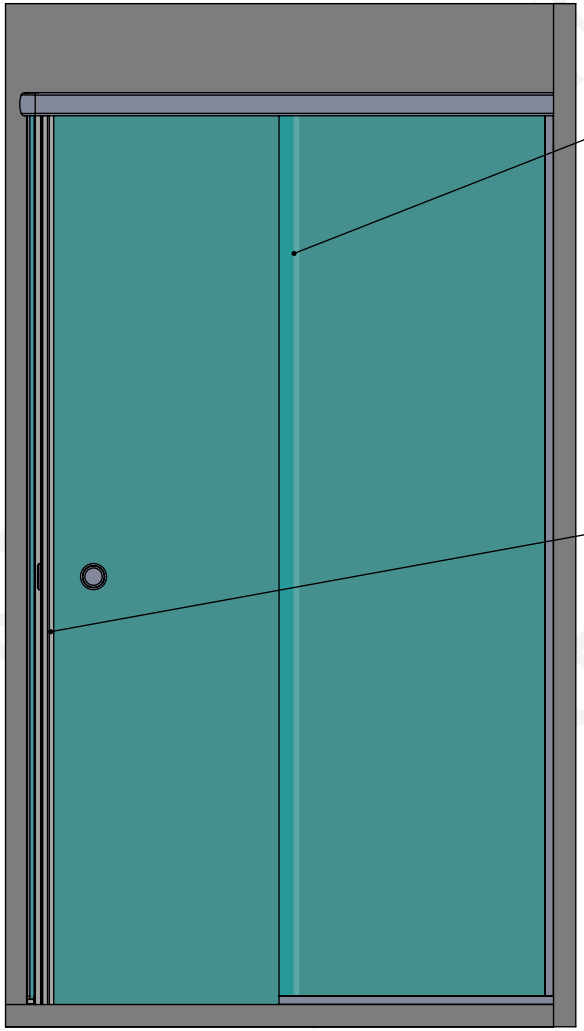

12mm 'F' SEAL
(USED ON OVERLAPS)

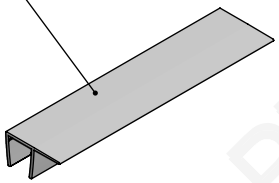

45° MAGNET SEAL
(USED TO CONNECT DOORS)

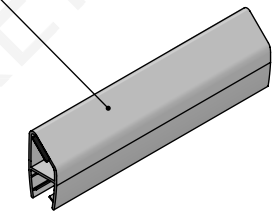

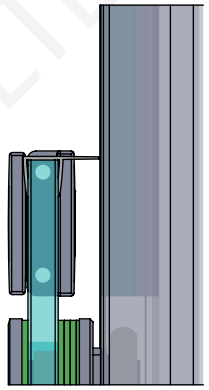

TOP VIEW

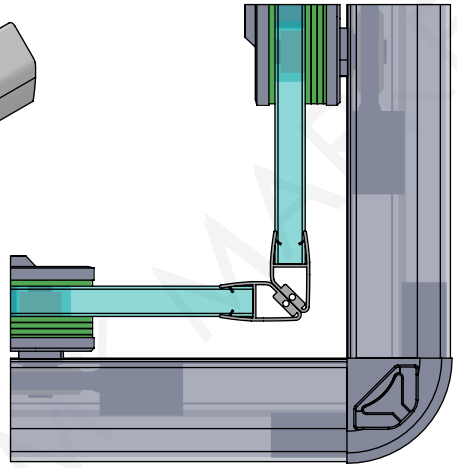

NOTE: ALL DIMENSIONS IN MILLIMETERS (MM) UNLESS STATED.

MWO Hardware
mwohardware.com.sg

MODEL:
9400-L (CURB) L SHAPED SLIDING SHOWER SCREEN SYSTEM

DATE: 10-FEB-2026

Disclaimer:
The above drawing is property of MWO Hardware & MK Marketing Pte Ltd and it is solely for referencing glass preparation. It shall not be distributed without consent from our company and all rights of this drawing are reserved. The company is indemnified against any claims arising from the user's interpretation of the technical drawing above.

TRACK LENGTH & GLASS DOOR CALCULATION REFERENCE DIAGRAM

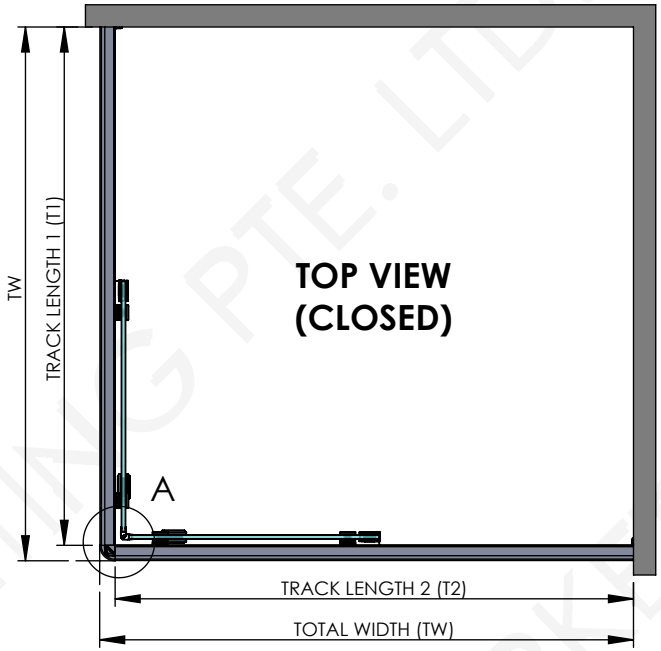

DW = (TW - 66 - 10) / 2
FW = DW + OVERLAP(45)
DH = TH - 12
FP = TH - 50 - 12
DOH = TH - 50 - 52
T1 = T2 = TW - 35

MAX DOOR WEIGHT = 35KG
CURB WIDTH = 70
CURB HEIGHT = 50

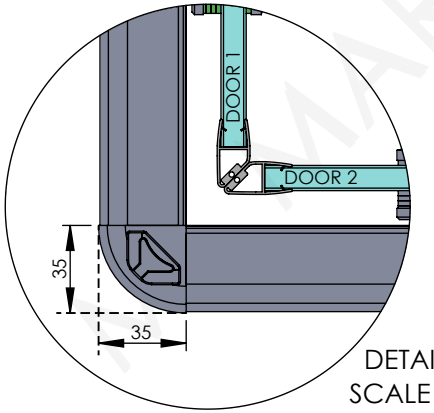

DETAIL A
SCALE 1 : 3

SIDE VIEW OF SYSTEM

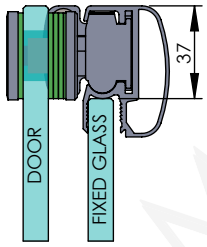

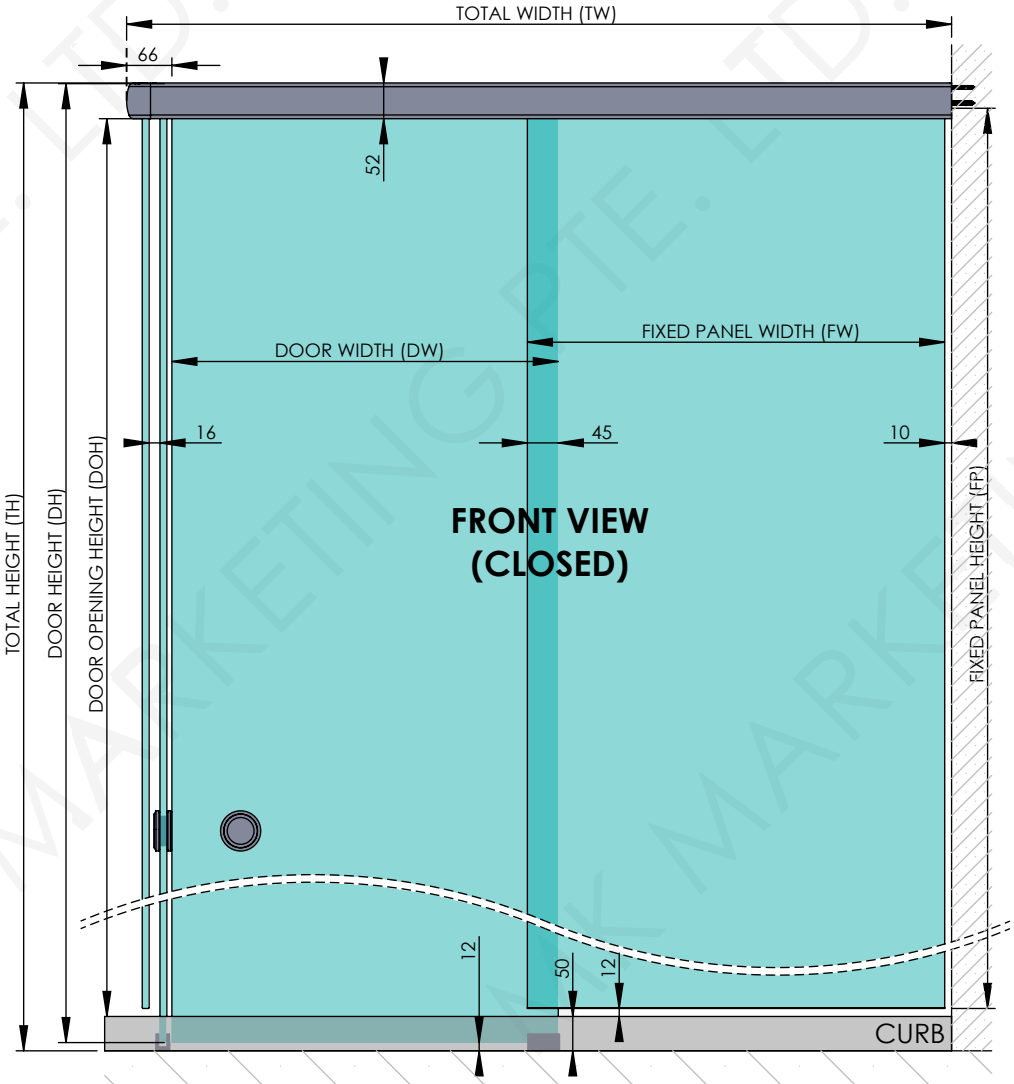

NOTE: ALL DIMENSIONS IN MILLIMETERS (MM) UNLESS STATED.

MWO Hardware
mwohardware.com.sg

MODEL:
9400-L (CURB) L SHAPED SLIDING SHOWER SCREEN SYSTEM

DATE: 10-FEB-2026

Disclaimer:
The above drawing is property of MWO Hardware & MK Marketing Pte Ltd and it is solely for referencing glass preparation. It shall not be distributed without consent from our company and all rights of this drawing are reserved. The company is indemnified against any claims arising from the user's interpretation of the technical drawing above.

GLASS PREPARATION FOR CUT-OUT

FRONT VIEW

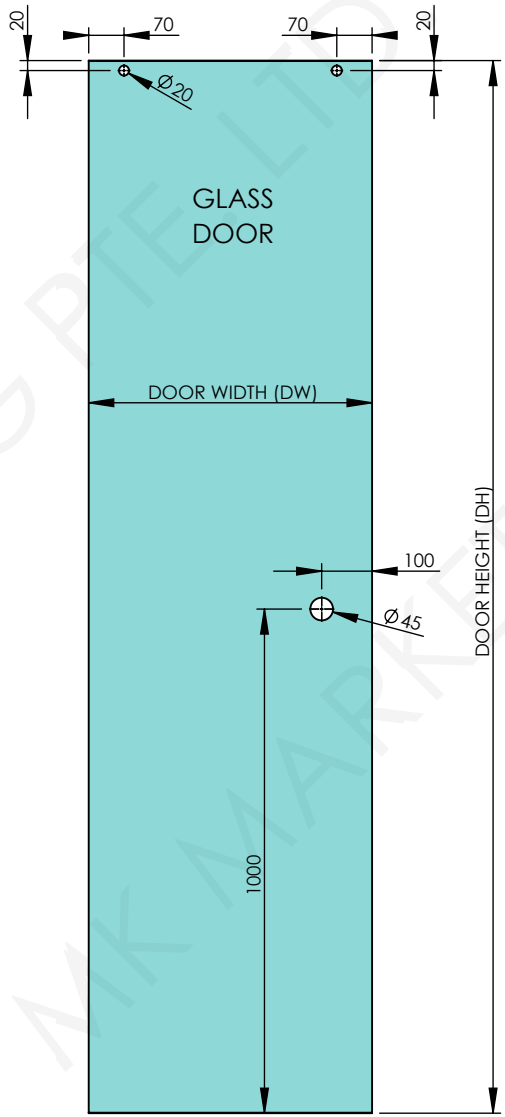

NOTE: ALL DIMENSIONS IN MILLIMETERS (MM) UNLESS STATED.

MWO Hardware
mwohardware.com.sg

MODEL:

9400-L (CURB) L SHAPED SLIDING SHOWER SCREEN SYSTEM

DATE: 10-FEB-2026

Disclaimer:

The above drawing is property of MWO Hardware & MK Marketing Pte Ltd and it is solely for referencing glass preparation. It shall not be distributed without consent from our company and all rights of this drawing are reserved. The company is indemnified against any claims arising from the user's interpretation of the technical drawing above.

MK MARKETING PTE. LTD.

SCREW AND STOPPER POSITION REFERENCE DIAGRAM

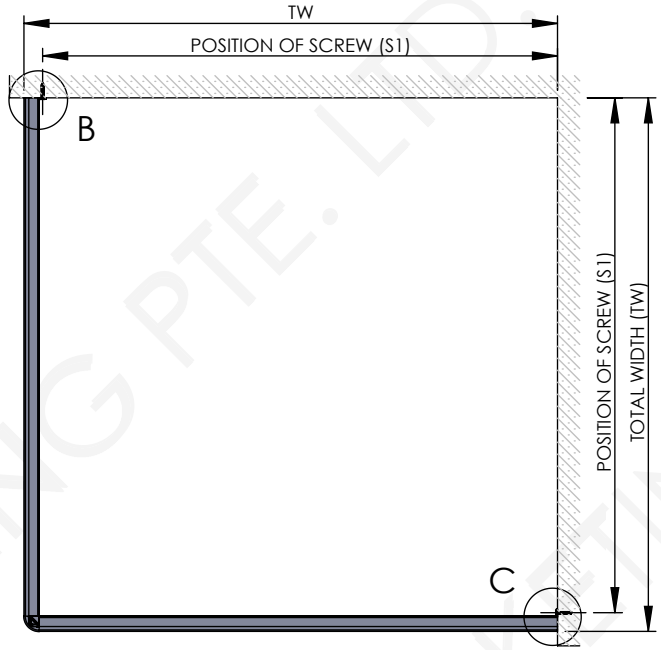

S1 = S2 = TW - 42
SH1 = TH - 77
SH2 = TH - 77 - 23

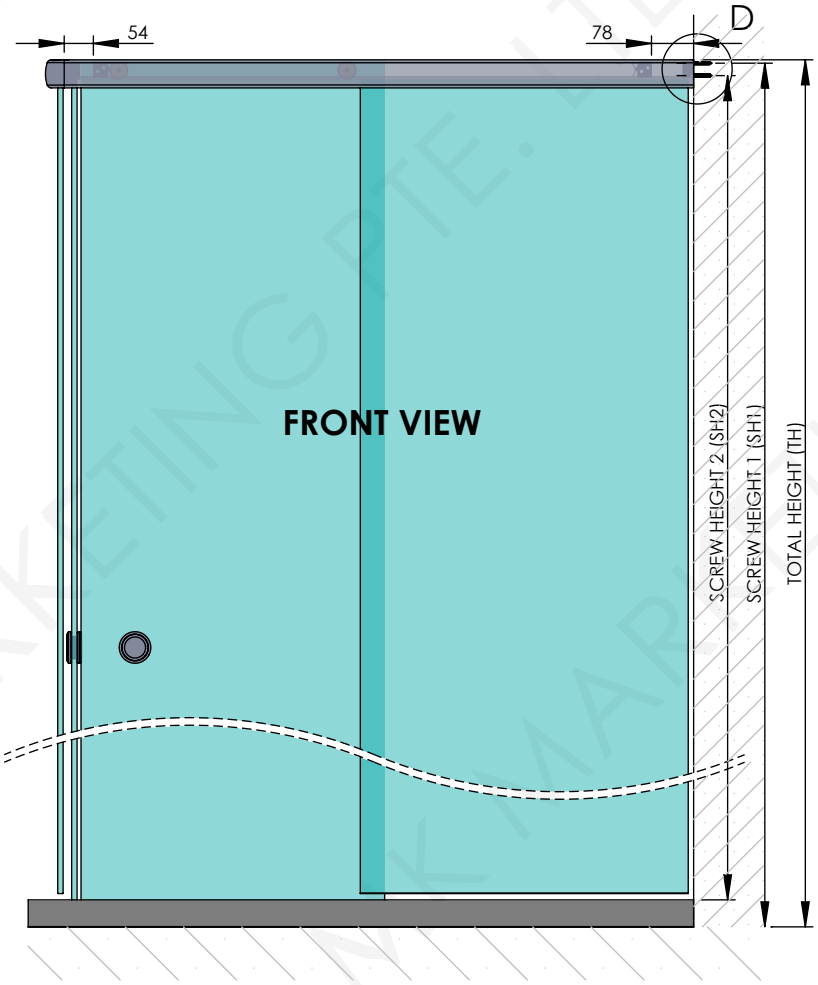

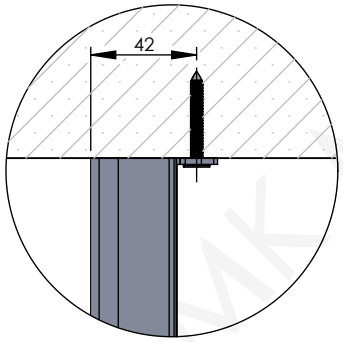

DETAIL B
SCALE 1 : 3

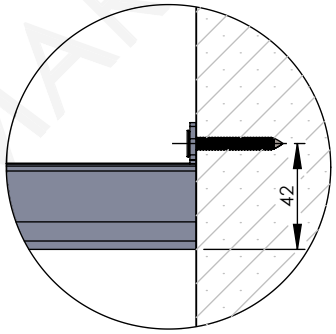

DETAIL C
SCALE 1 : 3

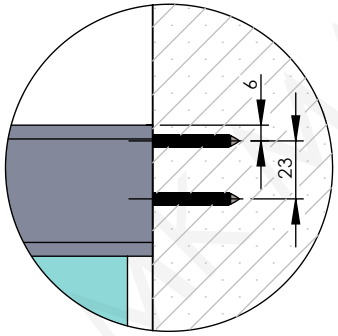

DETAIL D
SCALE 1 : 3

NOTE: ALL DIMENSIONS IN MILLIMETERS (MM) UNLESS STATED.

MWO Hardware
mwohardware.com.sg

MODEL:
9400-L (CURB) L SHAPED SLIDING SHOWER SCREEN SYSTEM

DATE: 10-FEB-2026

Disclaimer:
The above drawing is property of MWO Hardware & MK Marketing Pte Ltd and it is solely for referencing glass preparation. It shall not be distributed without consent from our company and all rights of this drawing are reserved. The company is indemnified against any claims arising from the user's interpretation of the technical drawing above.